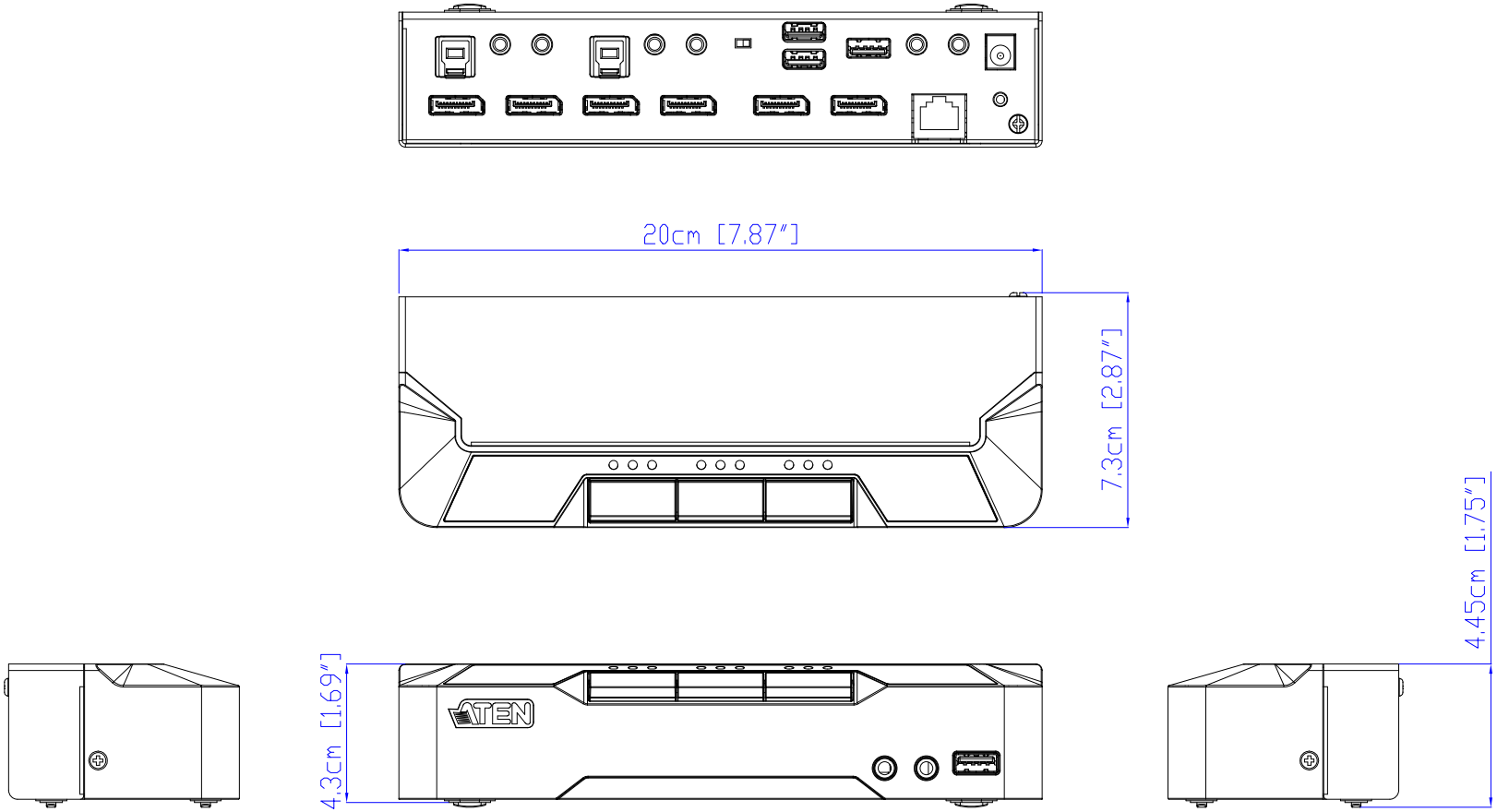


# CS1942DPA